欧盾科技
ODE TECHNOLOGY



- Manufacturer of lightweight hydraulic equipment
- Supplier of integrated hydraulic system solutions

400-0789-119



CONTENT

1 COMPANY

2 PRODUCT

3 FUTURE



COMPANY PROFILE



Company introduction

Originated in 2007 and headquartered in Hangzhou, Zhejiang Province, China, ODE Technology is a national high-tech enterprise with many branches at home and abroad. The company was founded fifteen years ago, has been committed to the R & D and development of electric ultra-high pressure technology, for all walks of life to provide energy efficient electro-hydraulic solutions and products, aspire to become the world's first-class manufacturer of electro-hydraulic tools and hydraulic system integration solutions provider.

The company mainly produces lightweight electro-hydraulic tools such as electro-hydraulic rebar shears, electro-hydraulic bending machines, electro-hydraulic punching, electro-hydraulic expanders, as well as electro-hydraulic shears, ultra-high-precision hydraulic pumps and hydraulic motors, hydraulic control valves, hydraulic cylinders, and various types of power hydraulic systems and other related products. The application areas involve steel pre-treatment construction, sea, land and air attack and demolition rescue, scrapped car dismantling, cable pipeline construction, ship projects, food and energy mining emergency protection, industrial manufacturing and military equipment and other fields of the relevant customised ancillary products.



Company Profile **specialisation** **Intelligent**

Development history

VISION

Become an internationally influential lightweight electro-hydraulic equipment manufacturer and hydraulic system integration solution provider

MISSION

For all walks of life
Providing lighter and more convenient electro-hydraulic products and solutions

VALUES

Integrity-based, quality first
Service oriented, customer first
People-oriented, talent first

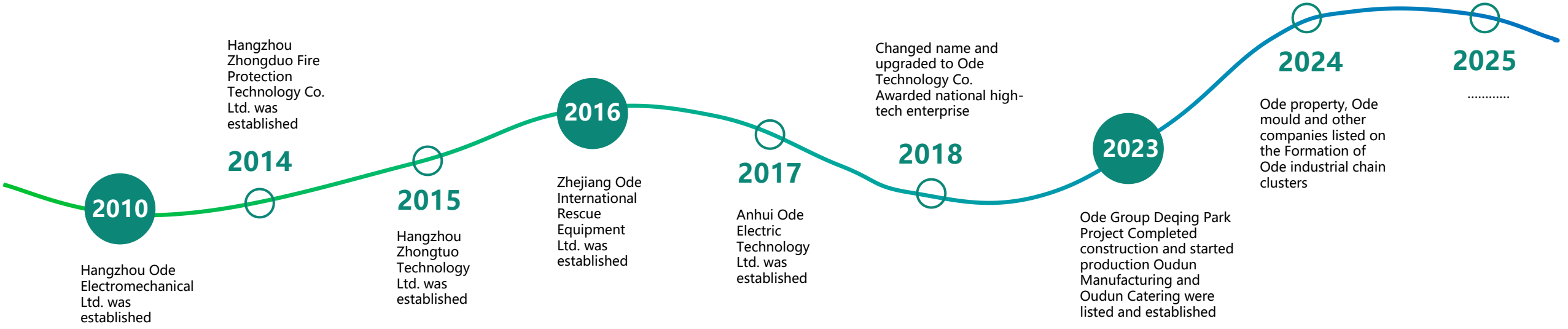

Team composition

R&D Centre

Market Expansion

Production and operations

Domestic Marketing



Foreign Marketing

Client Service

Quality Control

After-sales service

Enterprise service

The team is difficult to struggle, customer-centred, quality as a fundamental, rapid response to customers, provide timely and effective solutions, long-term and sustainable to create value for customers, for domestic and foreign customers to provide product sales and technical services. Our R & D strength, and as a university co-operation R & D base, joint research and development of the industry's top technologies.

400+ Professional Teams

7*24 hours full service

15+ years of R&D experience

product selection phase

Provide expert product knowledge in line with project requirements

tendering stage

Provide professional bidding knowledge and samples

production stage

Visualisation of the product manufacturing process for quality and quantity assurance

Delivery phase

Dedicated delivery team to assist in the delivery of your project

aftermarket

Perfect after-sales system to solve your worries

7*24 hours after-sales service

7*24 hours after-sales service, fast response

Provide professional answers and a full range of bidding solutions,

customer service all-day online service, professional after-sales team, so that you have no worries!

Honors and patents

Over the years, the company adheres to the “customer first, forge ahead” business policy, has won the high-tech enterprises specializing in new enterprises, a number of Zhejiang Provincial Technical Invention Award, annual gazelle enterprise and other honors. We hold nearly 50 invention patents and more than 200 utility model patents, and our products have passed CFFF, CE, RoHS and other domestic and international certifications.





















Business map



18 years of R&D and production

12 self-managed shops

More than 300 dealers

Category exceeds 1,000

Operations in 100 countries

Users exceeded 30,000

Workshop site























Company advantage

Enterprises for many years ploughing into the emergency rescue business, hydraulic breaking tools as an entry point, integration of various types of equipment in the rescue industry, to create a one-stop rescue procurement platform for all levels of procurement owners and users to provide professional equipment recommendations and services!

Experienced Quality Assurance

Excellent enterprise strength to create excellent products

A wide range of products are available

Selection of high-quality materials and exquisite craftsmanshipMultiple types of applications in many industries

Intimate price Fair and reasonable

Ensure product quality while maintaining reasonable prices

Optimisation of the technological pioneer structure

Technology Changes Life
Lightweight Technology Creates Efficiency

Technological advantage

Lightweight hydraulic equipment to transfer a wide range of energy, and can achieve high-speed stepless speed regulation, and low-speed movement can still run smoothly; can be controlled from a distance, easy to achieve automation and intelligence; good lubrication of moving parts to extend the service life of the equipment.

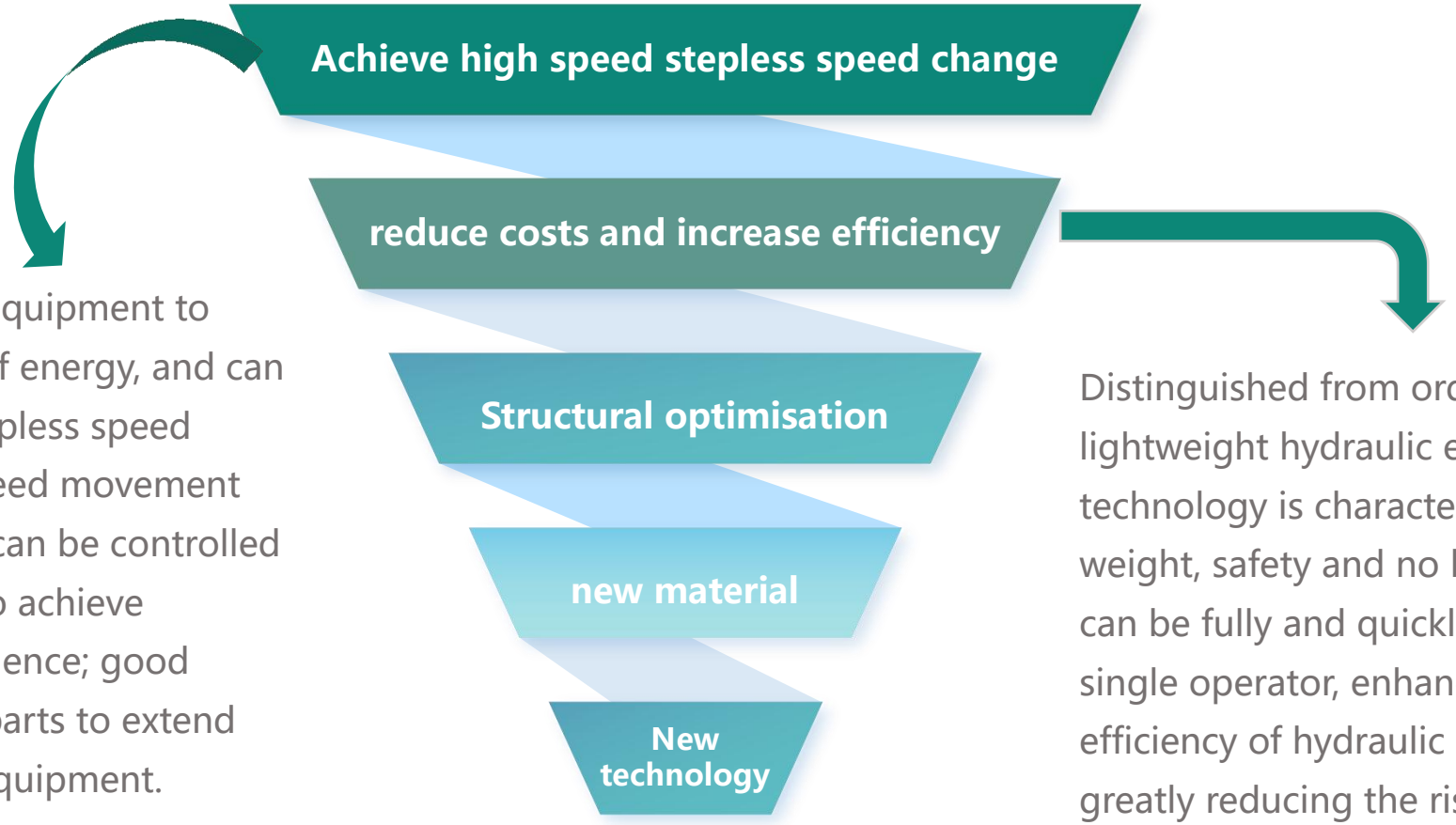

Distinguished from ordinary equipment, lightweight hydraulic equipment technology is characterised by light weight, safety and no leakage, which can be fully and quickly realised by a single operator, enhancing the efficiency of hydraulic equipment, and greatly reducing the risk of oil leakage and energy loss.

Business partner



























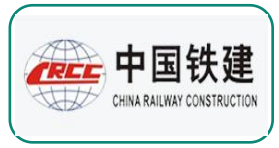

















PRODUCTS



Product matrix and effect module

Miniature hydraulic control valves and hydraulic pumps, hydraulic motors, etc.

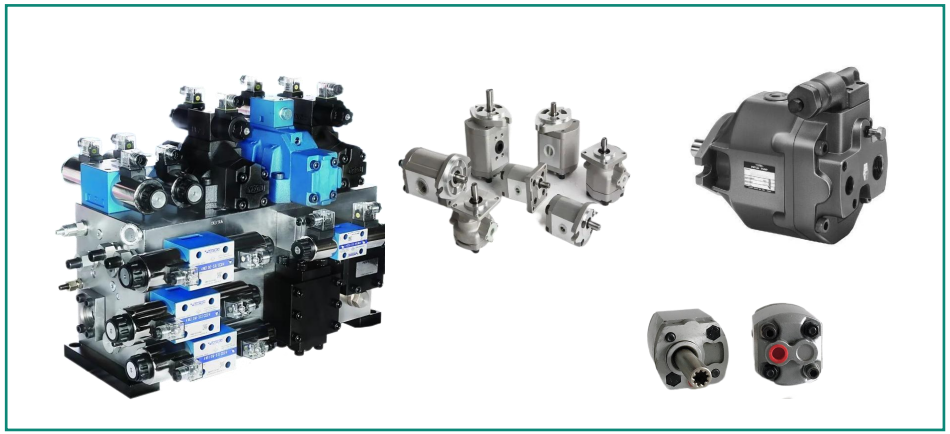

Lightweight high-precision hydraulic cylinders



Integrated solutions for lightweight hydraulic systems

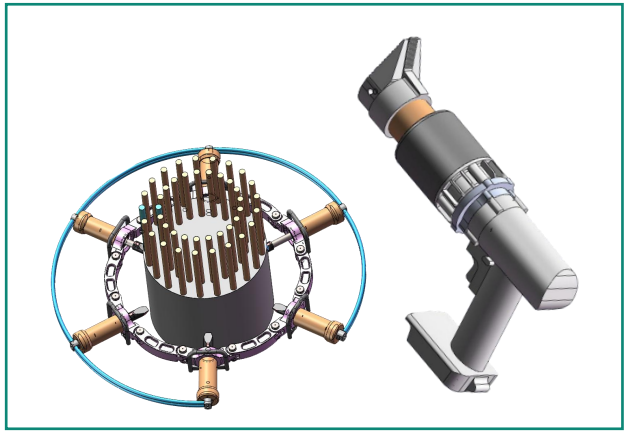

Lightweight Breaking and Rescue Equipment Product Line



Light construction machinery and equipment product line

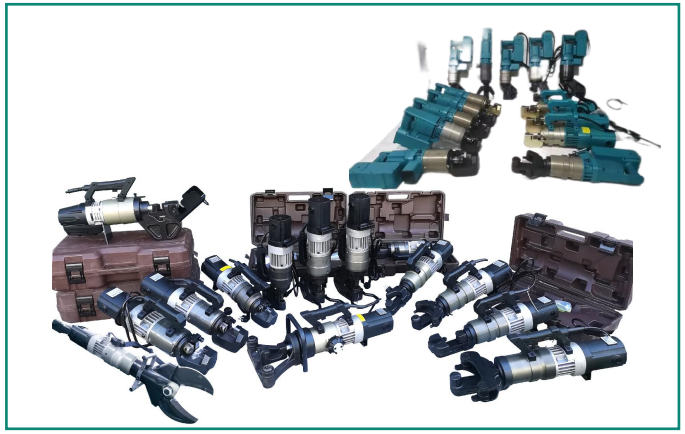

Product Areas

Demolition tools are a class of equipment used to forcibly enter or remove obstacles, widely used in emergency firefighting, earthquake rescue, water rescue, forest firefighting, construction industry, mining, military exercises and even archaeological excavations and film and television special effects, etc.



Breakout equipment matrix

Hydraulic breaking tools

Hydraulic shears: used to cut hard materials such as metal and steel.

Hydraulic spreader: used for propping up or separating objects, such as car doors and walls.

Hydraulic jacking bar: used to prop up heavy objects or widen gaps.

Electric breaking tools

Electric drill: used to drill holes in concrete, metal and other materials.

Electric saws: used to cut materials such as wood, metal, etc.

Electric picks: used to break concrete, rock and other hard objects.

hand tool for breaking and unplugging

Crowbar: Used to pry open or move heavy objects.

Chisels: used for smashing concrete and brick walls.

Broad axe: used for chopping wood or breaking up light structures.

Portable rescue equipment

Backpack: can be carried on the back, easy to carry and rapid deployment, suitable for a variety of demolition and rescue tasks.

Demolition robots: used in hazardous environments, such as fire and explosion sites.

Hydraulic Breaking Tool Set - Sailings series

Hydraulic breaking and demolition tool set, used in various emergency rescue, building demolition and renovation, industrial facilities renovation and other fields.



1. Customised colours available as an upgrade
2. Upgraded 360° swivel handle
3. Upgraded customised illuminated handles
4. Upgraded product performance parameters
5. Customised product accessories are available
6. Upgraded packaging methods
7. Upgrade regular after-sales service
8. ……

Electro-hydraulic demolition tool set

Hydraulic breaking and demolition tool set, used in traffic accident rescue, earthquake rescue, fire scene, petrochemical, construction and equipment demolition and other fields.。



Other Supporting Tools



Manual breaking and demolition tool set

Manual demolition tool set, the use of ‘punch’ principle, so that a single operator to maximise the power of the impact without deviation, effectively improve work efficiency



The Manual Breaking Tool Set is a stand-alone, portable and economical rescue equipment for a wide range of emergency breaking and rescue tasks. Designed for independence, portability and reliability, it is one of the most important pieces of equipment for emergency responders. Despite its reliance on human operation, the manual breakout toolset has irreplaceable advantages in situations where no power source is available or a rapid response is required.

The tool set can continue to act on wood, concrete, metal, or mixed materials when hydraulics, electricity, and pneumatics are not available. The housing is aluminium, the handle has a non-slip stripe pattern, and the socket grip ring provides leverage.

- **independent**
- **portability**
- **high strength**
- **usability**
- **economics**
- **durability**

Backpack breaking tool set

The Backpack Breaking Tool Set is a multi-functional, portable and highly efficient rescue equipment for all kinds of emergency breaking and rescuing tasks. Designed for portability, efficiency and reliability, it is one of the most important pieces of equipment for emergency rescue personnel.

single pack



double pack



Concrete | plug-in breaking tool set

Concrete breaking and demolition tool set, used in emergency rescue and rescue, building demolition and renovation, road and bridge maintenance, industrial facilities renovation and tunnel construction and building.

concrete



plug-and-play



The plug-in breaking tool set is a multifunctional, modular and highly efficient rescue equipment, suitable for all kinds of emergency breaking and rescue tasks. Designed for modularity, efficiency and reliability, it is one of the most important pieces of equipment for emergency responders. The efficiency and flexibility of rescue can be greatly improved through the quick change of different breaking tools.

Amphibious hydraulic breaching tool set



Amphibious Hydraulic Breaking Tool Set is a kind of rescue and breaking equipment designed for amphibious environment, including amphibious electric pump, hydraulic shear, hydraulic shear expander, hydraulic expander, hydraulic propping device, hydraulic bipolar propping device and tubing, which is widely used in the fields of firefighting, emergency rescue and military. It can work efficiently in both land and underwater environments, with strong breaking capacity, suitable for ship accident rescue, underwater personnel trapped rescue, drowning personnel salvage, underwater building construction and demolition, underwater equipment installation and dismantling and other complex scenarios, it is an indispensable equipment in the modern rescue operations, which can significantly improve the rescue efficiency and safeguard the safety of personnel.

Cutting Saw Set



Cutting saw set, multi-functional and high-efficiency cutting tool set, contains two-wheeled anisotropic cutting saws, ring saws, chain saws, toothless saws and other equipments, which are widely used in the fields of construction, rescue, metal processing, woodworking and so on. In addition to the main body of the cutting saw, it also contains a variety of cutting saw blades (such as metal cutting blades, stone cutting blades, wood cutting blades) and auxiliary tools (such as guards, wrenches, batteries or power adapters, etc.), which has become an indispensable tool in many industries due to its portability, high efficiency and multi-functionality.



PRODUCT CUSTOMIZATION



Product Customization Services



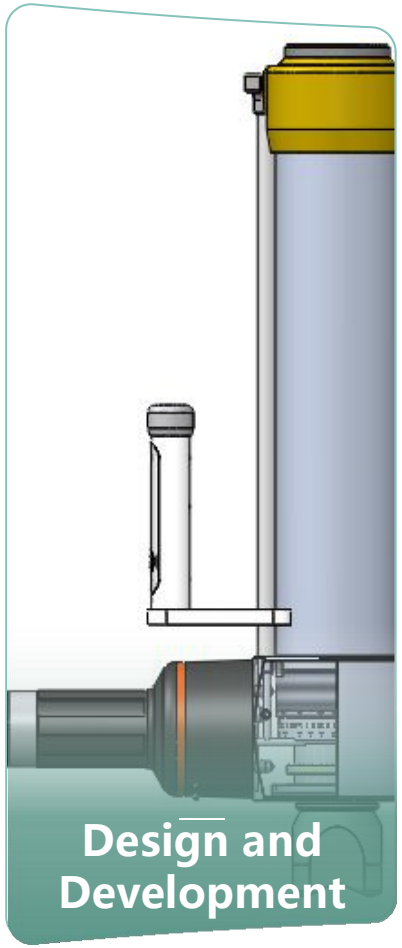

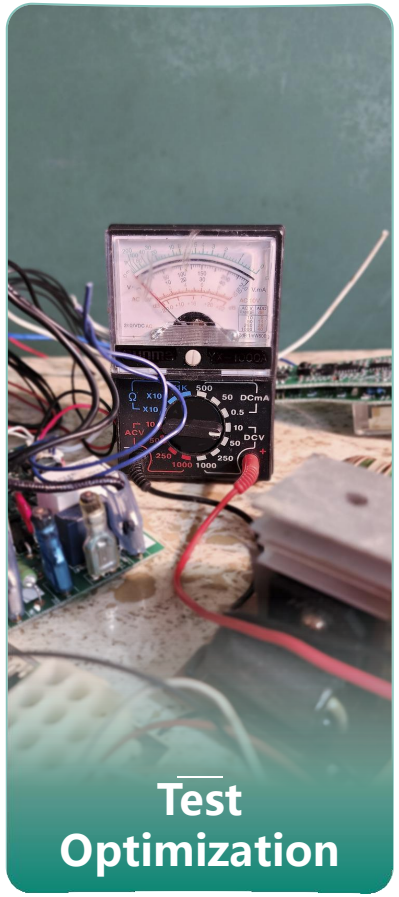

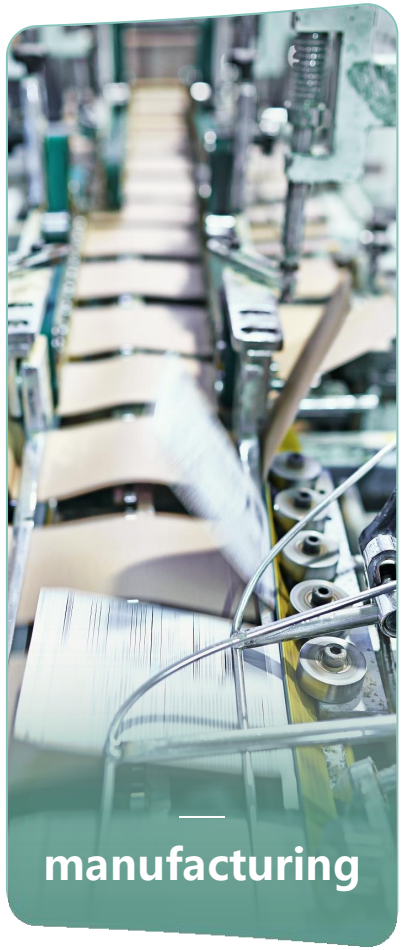



Future direction



01

Innovative R&D

Technology InnovationDesign InnovationProcess InnovationApplication Scenario Innovation

02

production automation

Automated production line key process automation automated inspection and quality control green manufacturing

03

Product Intelligence

Energy saving and environmental protection information intelligent VR and AR simulation test robot technology application

04

Technologisation of services

IoT technology monitoring intelligent customer service system customer self-service portal product lifecycle management customised services



欧盾科技
ODE TECHNOLOGY

Contact Us

Company Address： 1304, Mengbao Building, No.219, Bin Kang Road, Xixing Street, Binjiang District, Hangzhou, Zhejiang, China

Factory Address： No.119 Qihang Road, Leidian Town, Deqing County, Huzhou City, Zhejiang Province, China Oudun Group

Enquiry Hotline：400-0789-119

WeChat code scanning consultation

Public number ‘ODE Technology’ .

Scan the code to view the official website of ODE